FRI-ONLINE-1-BFT(R)-03

INFLUENCE OF VACUUM COOLING METHOD ON QUALITY INDICES OF BREAD

PhD student Oleksandr Kozak
Department Machines and apparatus of food and pharmaceutical productions,
National University of Food Technology, Ukraine
E-mail: oleksandrkozak2@gmail.com

PhD student Ivanna Nazarenko
Department of Foodstuff Expertise
National University of Food Technology, Ukraine
E-mail: yana.telychkun@gmail.com

Assoc. Prof. Mykola Desyk, PhD
Assoc.prof. Yuliya Telychkun, PhD
Prof. Vladimir Telychkun, PhD
Department Machines and apparatus of food and pharmaceutical productions,
National University of Food Technology, Ukraine
E-mail: nikdesyk@gmail.com, tvill@meta.ua

Abstract. *The method of vacuum cooling allows to cool the bread quickly, reduce the production area for cooling, to provide sterile process conditions. The influence of cooling modes on the quality of wheat bread was studied.*

The bread was cooled under a vacuum of 4–6 kPa, the rate of pressure reducion varied from 2 to 8 kPa/s. Structural and mechanical properties of bread were determined by the method of penetration.

The critical rate of pressure drop was 4.5 kPa/s, at higher speeds the structure of the bread is destroyed, the crust is separated from the crumb. Bread cooled under vacuum stimulates freshness (elasticity) longer than after the usual, natural method of cooling.

Keywords: *Bread, Cooling, Vacuum, Crumb.*

INTRODUCTION

Cooling of bread is carried out to give the bread structural and mechanical characteristics that will allow the process of cutting and packaging, because under mechanical impact baked hot bread crumples, loses its shape, structure and porosity.

In practice, the most common are two methods of cooling: natural and air-conditioned (Telychkun, 2020). The main disadvantages of these cooling methods are:

- Significant duration of the process;
- Large size and weight of equipment for cooling bread;
- High energy costs;
- Complex system of conveyors;
- Requirements for working air conditions;
- Uneven cooling;
- Bacterial contamination of bread.
- The natural method of cooling requires manual labor

An innovative way to cool food, including bread, is to use a vacuum method of cooling, its advantages include:

- Reduction of cooling time
- Increase in volume,
- Increasing the shelf life,
- Improving structural and mechanical properties.

The disadvantages include:

- Higher drying percentage,
- Curing of the crust

The use of known equipment for cooling the finished product does not significantly reduce the duration of this process, so there is a need to create equipment for vacuum cooling of bread in the stream, which will intensify the cooling process.

For a long time, many scientists have been researching the process of vacuum cooling of bread, including scientists from our university. But the introduction of vacuum cooling in the flow requires improvement of both theory and process parameters. For example, due to too intense pressure reduction there is a pressure gradient between the steam in the workpiece and the environment, which is accompanied by the destruction of the workpiece (Litvinchuk, 2014). In this regard, it is advisable to study the effect of the rate of vacuum on the quality of the finished product, to investigate the effect of vacuum cooling on the quality of bread.

EXPOSITION

Material and methods

Laboratory installations and research methods

Studies of the process of vacuum cooling were carried out on a laboratory installation, the scheme of which is presented in Fig. 1, which consists of: vacuum chamber, vacuum chamber cover, vacuum pump, condensate collector, condenser, manometer, pipeline.

The laboratory unit works as follows: 1 – take a freshly baked loaf (temperature 98-100 ° C) and measure the weight and temperature in the center and geometric indicators, 2 – place in a vacuum chamber, 3 – cover the vacuum chamber, 4 – turn on vacuum pump, and with the help of video recording we record the change of pressure in time in the vacuum chamber, 5 – after reaching the required pressure turn off the vacuum pump, and with the help of the appropriate valve depressurize the vacuum chamber, 6 – get chilled loaf and measure weight and temperature in cents and geometric indicators.

During the study of the process of vacuum cooling of bread, the following parameters were controlled:

1) initial and final mass (g)
2) initial and final temperature (^{0}C)
3) the time of the experiment (s.)
4) the depth of vacuum in the vacuum chamber (kPa.)

The study of the influence of the vacuum cooling method on the quality of bread was carried out using a penetrometer. Fig. 2 schematically shows the method of studying the structural and mechanical parameters of the crumb.

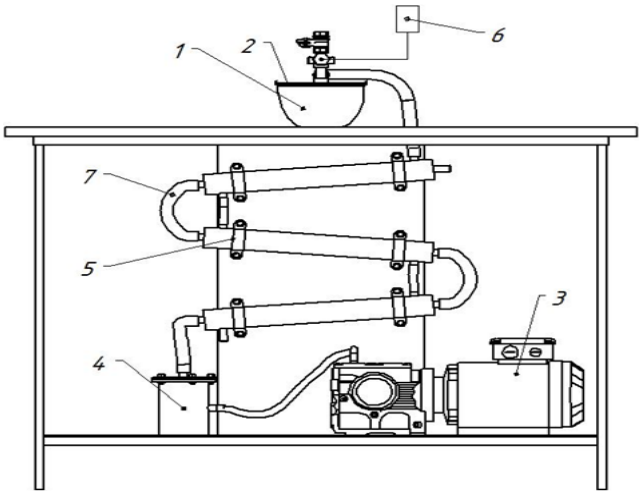

Fig. 1. Experimental installation for vacuum cooling of bread:
1 – vacuum chamber; 2 – vacuum chamber cover; 3 – vacuum pump; 4 – condensate collector; 5 – capacitor; 6 – manometer; 7 – pipeline.

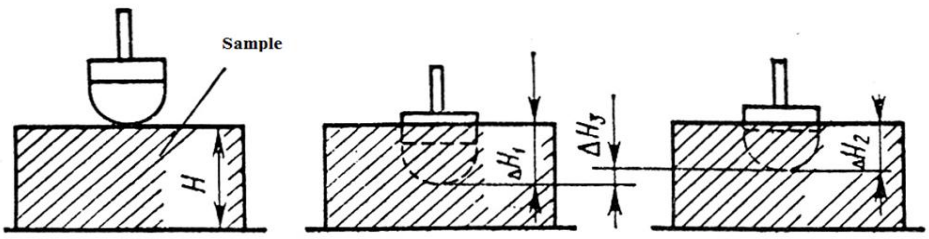

a **b** **c**

Fig. 2 schematic representation of the method of research of structural and mechanical parameters of bread crumbs:
H – initial height

ΔH1 is an indicator of the total deformation of the crumb compression

ΔH2 – characterizes the residual deformation of the crumb or its plasticity

ΔH3 – the difference between the values of ΔH1 and ΔH2 and characterizes the elasticity of the crumb

Investigations of structural and mechanical parameters of bread crumbs with a penetrometer were carried out as follows*:*

1 – from the test sample cut a slice 40 mm thick;

2 – with adjustments bring the test sample so that it is relative to the working body of the penetrometer as shown in Fig. 2 a;

3 – put a weight weighing 5 g on the working body;

4 – turn off the latch of the rod of the working body of the penetrometer for 5 s, and turn it on, the working body penetrates the sample as shown in Fig. 2 b;

5 – take the weight, and turn off the rod lock for 10 s., The working body will take the position shown in Fig. 2 c;

During the study of structural and mechanical parameters of the crumb, the units of penetration of total and residual deformation were recorded:

RESULTS AND DISCUSSION

Mode of pressure change in the vacuum chamber

The bread was destroyed at modes 2 and 3 (figure 3), when the vacuum was created quickly. And, when the rate of vacuum was less than 4.5 kPa/s, we got a good quality of colled bread (Figure 3, line 1).

The recommended mode of pressure change in the vacuum chamber (maximum rate of vacuum in the chamber is υmax = 4.5 kPa/s) required for cooling a loaf weighing 0.5 kg to a temperature of 30 °C at which no destruction occurs, the maximum cooling time is 2 minutes (Fig. 4, sample 1).

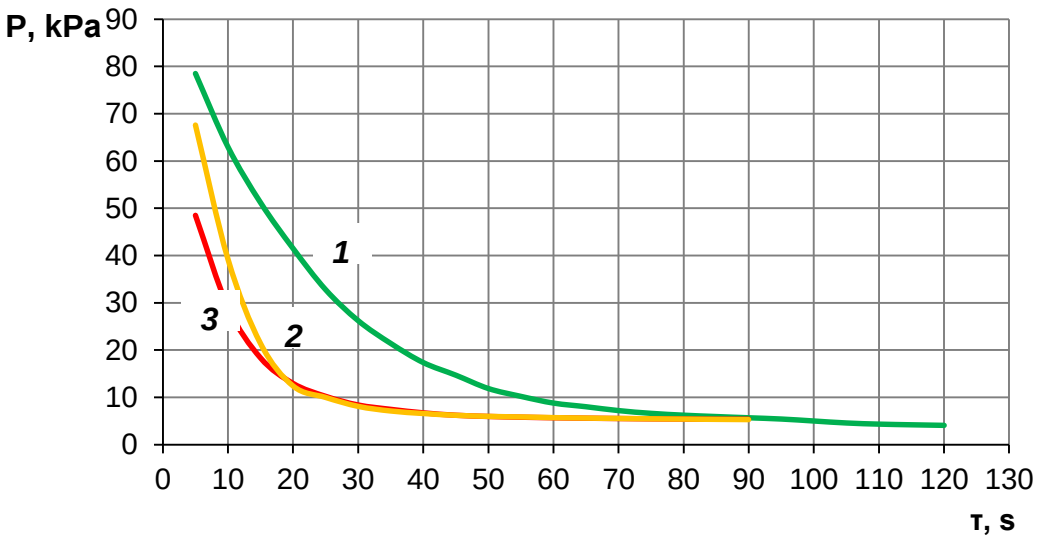

Fig. 3. Recommended pressure change mode in the vacuum chamber

Fig. 4. Cooled bread quality after cooling with different modes (according Figure 3).

Indicators of structural and mechanical properties of the loaf under different methods of cooling and storage

Comparative table of indicators of structural and mechanical properties of the loaf under different methods of cooling and storage.

Cooling method	Immediately after cooling			A day later in a plastic bag			In a day without packing		
	ΔH1	ΔH2	ΔH3	ΔH1	ΔH2	ΔH3	ΔH1	ΔH2	ΔH3
Vacuum cooling	161	141	20	58	53	5	60	55	5
Natural way of cooling	159	153	6	56	51	5	41	37	4

CONCLUSION

The maximum speed of creation of rarefaction in the vacuum chamber at which there is no destruction of a long loaf – 4,5 kPa/s. The mode of creating a vacuum for cooling the loaf to 30 ˚C is proposed.

Using a penetrometer to determine the effect of the method of cooling and storage of bread on the structural and mechanical properties of bread crumbs.

From the comparative table of structural and mechanical indicators it is visible that the bread cooled by a vacuum way keeps the elasticity longer.

From the data of the comparative table of structural and mechanical indicators it is possible to draw a conclusion that the bread cooled by a vacuum way has longer term of storage, than the bread cooled by a natural way.

REFERENCES

Kozak O., Nazarenko I., Desyk M., Telychkun V. (2020). Research of the process of vacuum cooling of bread. *Proceedings of University of RUSE*, 59(10.3), 13-17

Kozak O., Nazarenko I., Desyk M., Telychkun V. (2020). Influence of cooling of bakery products in the conditions of rarefaction on quality of finished products. *International conference for students "Student in Bucovina", December 18, 2020*. Suseava, Romania.

Litvinchuk A.A., Komarova O.V., Arnaut S.A. (2014), Investigation of the process of vacuum-evaporative cooling of bread. Food industry: science and technology, 2 (24), pp. 45-52.

Everington, D. (2003). Vacuum technology for food processing. Food Technology International Europe, № 5, 71–74.

McDonald, K. (2001). The formation of pores and their effects in a cooked beef product on the efficiency of vacuum cooling. Journal of Food Engineering, № 47, 175–183.

Primo-Martín C., H. de Beukelaer, Hamer R.J., T. van Vliet (2008). Fracture behaviour of bread crust: Effect of bread cooling conditions. Journal of Food Engineering, 89, p. 285–290.

Zakharevych V.B., Havva O.M., Yukhno M.I. (2012). Pakuvalni materialy dlia vyrobnytstva khlibobulochnykh vyrobiv. Kharchova nauka i tekhnolohiia, 1(18), p. 104-106.